Analog VLSI CircuitProject

Contents

- Objective
  - Design Requirement
- Current Mirror Network
  - Cascode pair biasing
- Folded Cascode Design
  - Design Calculation
  - NMOS-PMOS-Overall Design
  - Results
- CMFB
  - Design
  - Buffer Design
  - Results & Analysis
- 2nd Stage Design
  - Design Calculation
  - Results
- Final Results & Conclusion
- References

Objective

Design Requirements

- $A_v \geq 70\ dB$
- $UGF \geq 100MHz$
- Fully Differential OpAmp
- Rail-to-Rail input capability
- CMFB
- $C_L = 500fF$

Current Mirror

Current Mirror

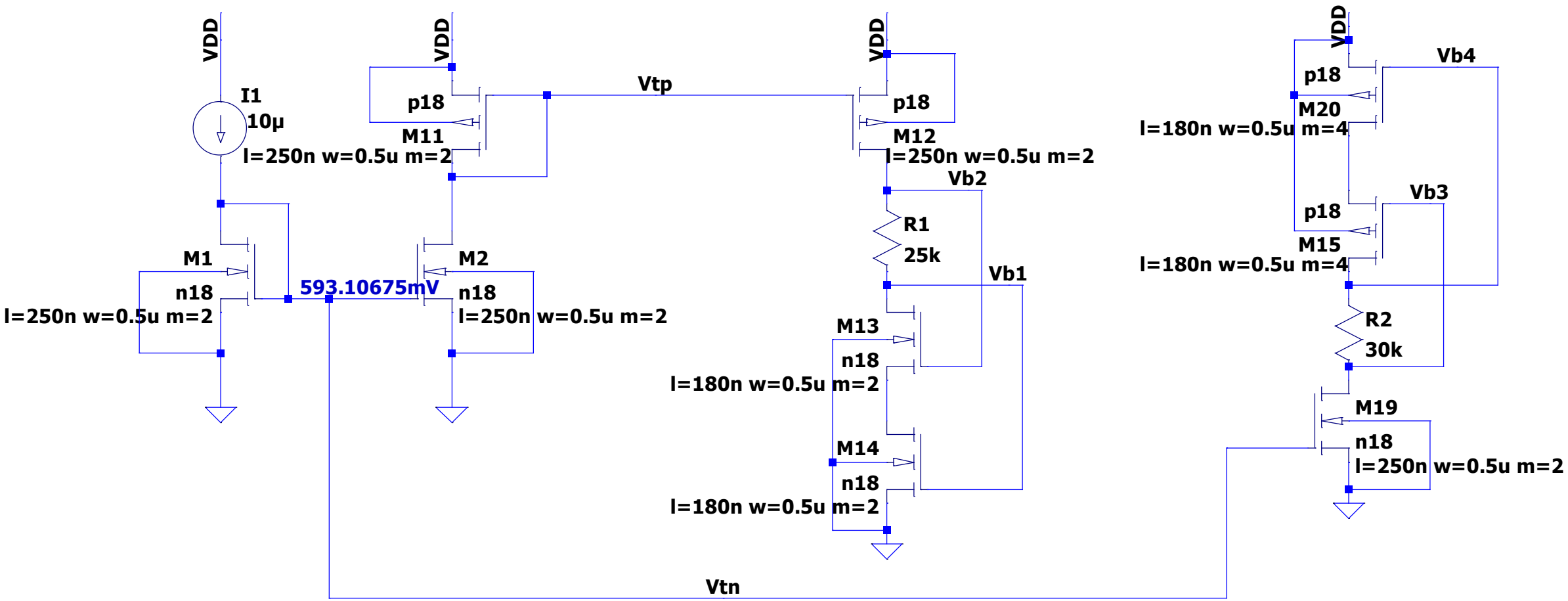

Current Mirror

- V_{tp} – biases PMOS Tail Current for M0p Transistor
- V_{tn} – biases NMOS Tail Current for M0n Transistor and others
- V_{b1} – biases M3 and M4 Transistor(Lower NMOS Stack)
- V_{b2} – biases M5 and M6 Transistor(Upper NMOS Stack)
- V_{b3} – biases M7 and M8 Transistor(Lower PMOS Stack)
- V_{b4} – biases M9 and M10 Transistor(Upper PMOS Stack)

Current Mirror

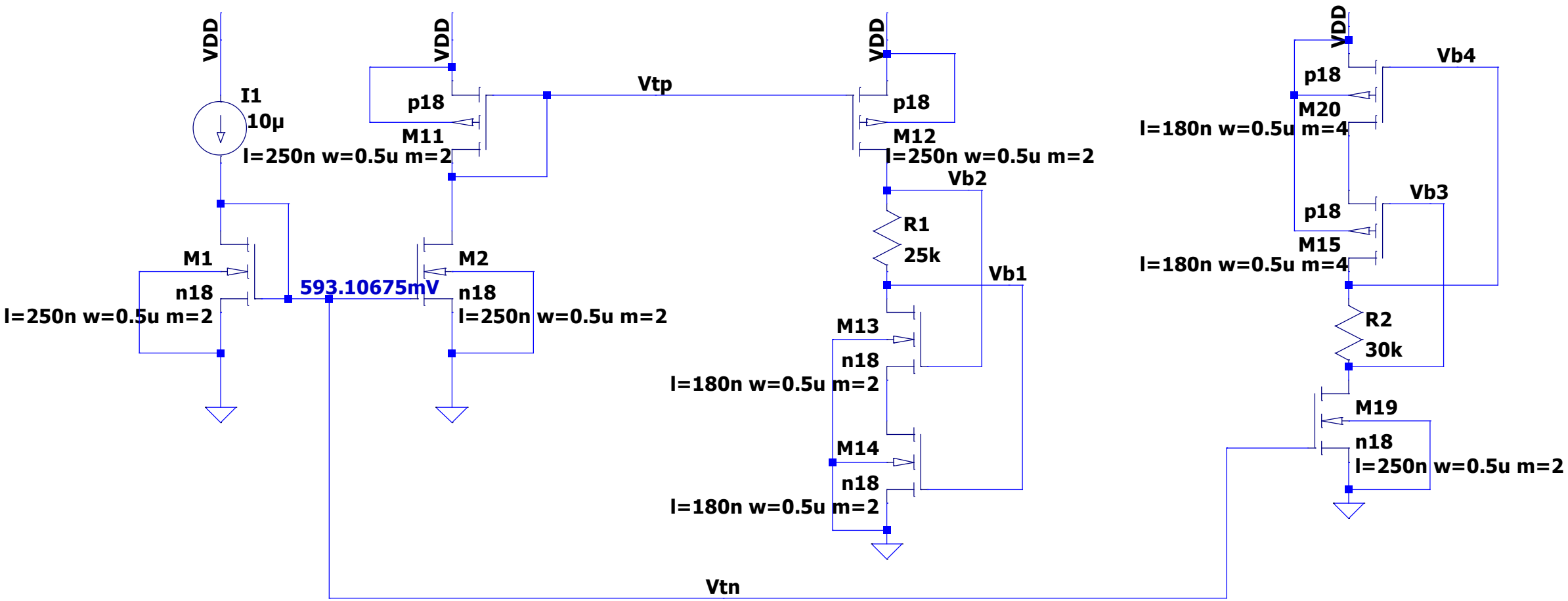

Folded Cascode Rail-to-Rail Design

Design Budgeting

- $UGF \approx \frac{g_m}{2\pi C_L} \geq 100\text{MHz}$
- $\Rightarrow g_m \geq 2\pi \times 100MHz \times C_L$
- $\Rightarrow g_m \geq 0.314mS$

- Let's choose g_m=1 mS
- Let the design $V_{in,cm}$=0.9V
- 0.6V – Vgs biasing
- 0.3V – Vdssat + margin for tail current source

NMOS Characterization

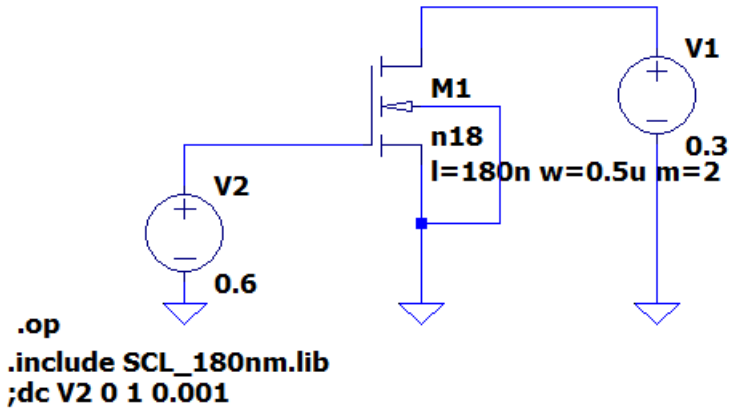

Id:	1.13e-05
Vgs:	6.00e-01
Vds:	3.00e-01
Vbs:	0.00e+00
Vth:	4.82e-01
Vdsat:	1.30e-01
Gm:	1.34e-04

We must scale NMOS such that g_m=1mS

$W_{req.d}=7.4*W_1$

PMOS Characterization

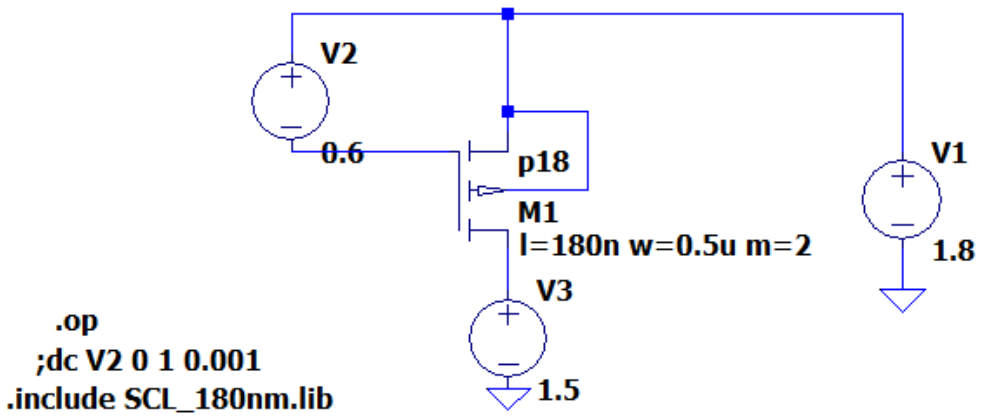

Id:	1.62e-06
Vgs:	6.00e-01
Vds:	3.00e-01
Vbs:	0.00e+00
Vth:	5.16e-01
Vdsat:	9.91e-02
Gm:	2.35e-05

We must scale PMOS such that g_m=1mS

$W_{reqd}=42.5*W_1$

NMOS Input Pair

Name:	m1n	m2n	m0n
Model:	n18	n18	n18
Id:	7.39e-05	7.39e-05	1.48e-04
Vgs:	6.17e-01	6.17e-01	5.93e-01
Vds:	1.27e+00	1.27e+00	2.83e-01
Vbs:	-2.83e-01	-2.83e-01	0.00e+00
Vth:	5.30e-01	5.30e-01	4.63e-01
Vdsat:	1.12e-01	1.12e-01	1.42e-01
Gm:	9.75e-04	9.75e-04	1.69e-03
Gds:	1.99e-05	1.99e-05	5.83e-05

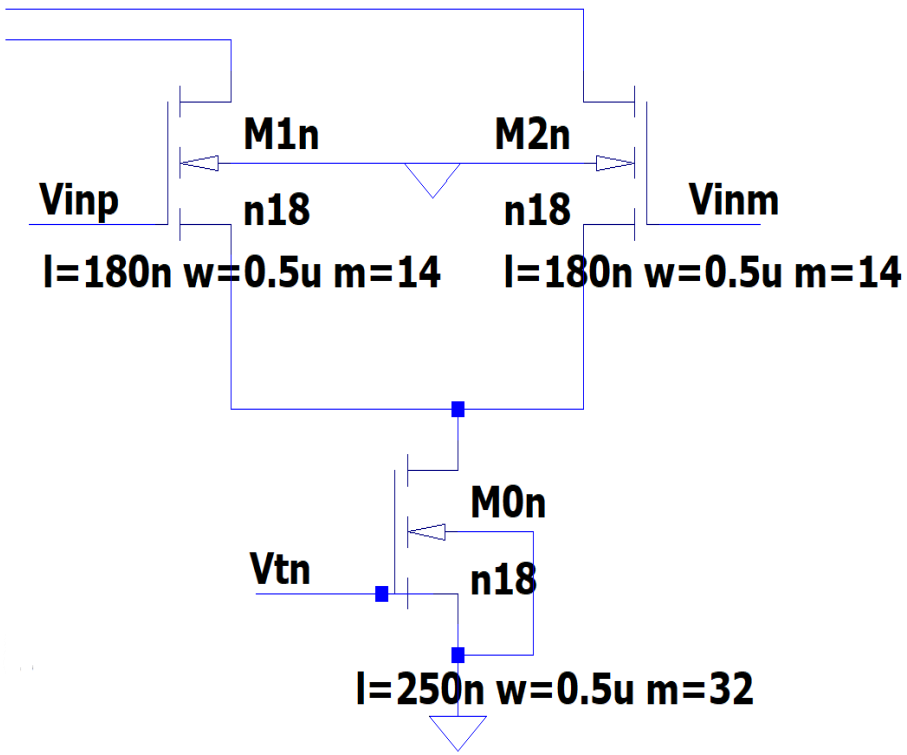

PMOS Input Pair

Name:	m1p	m2p	m0p
Model:	p18	p18	p18
Id:	-6.30e-05	-6.30e-05	-1.26e-04
Vgs:	-6.47e-01	-6.47e-01	-7.17e-01
Vds:	-1.30e+00	-1.30e+00	-2.53e-01
Vbs:	2.53e-01	2.53e-01	0.00e+00
Vth:	-5.30e-01	-5.86e-01	-4.32e-01
Vdsat:	-9.10e-02	-9.10e-02	-2.42e-01
Gm:	9.77e-04	9.77e-04	7.37e-04
Gds:	1.67e-05	1.67e-05	1.06e-04

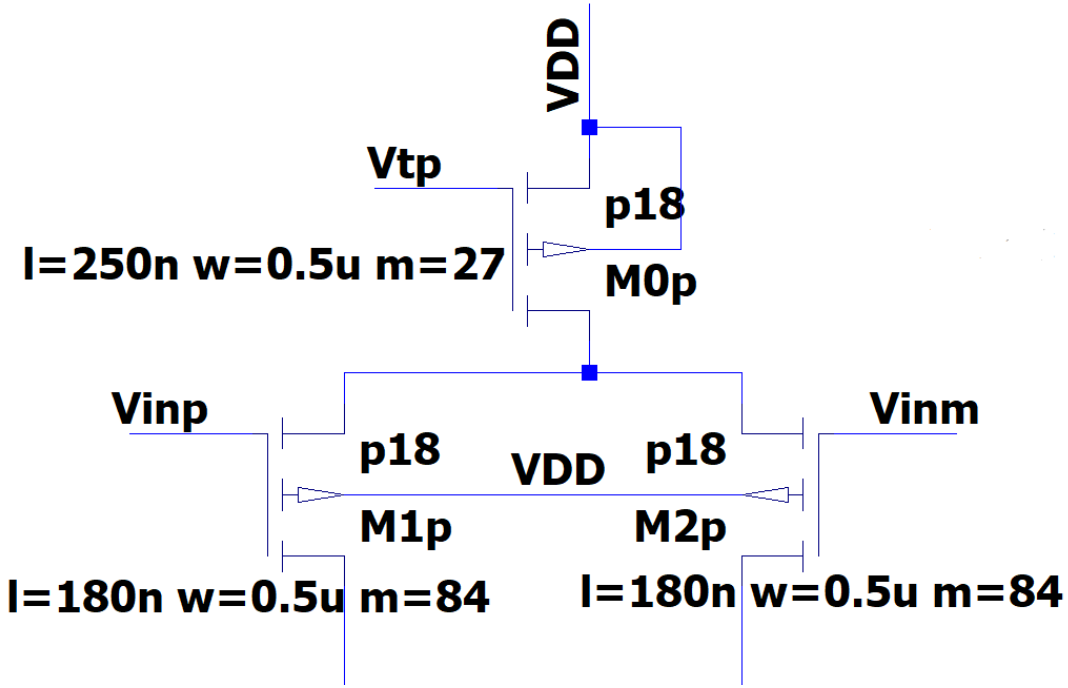

Main Transistor Stack

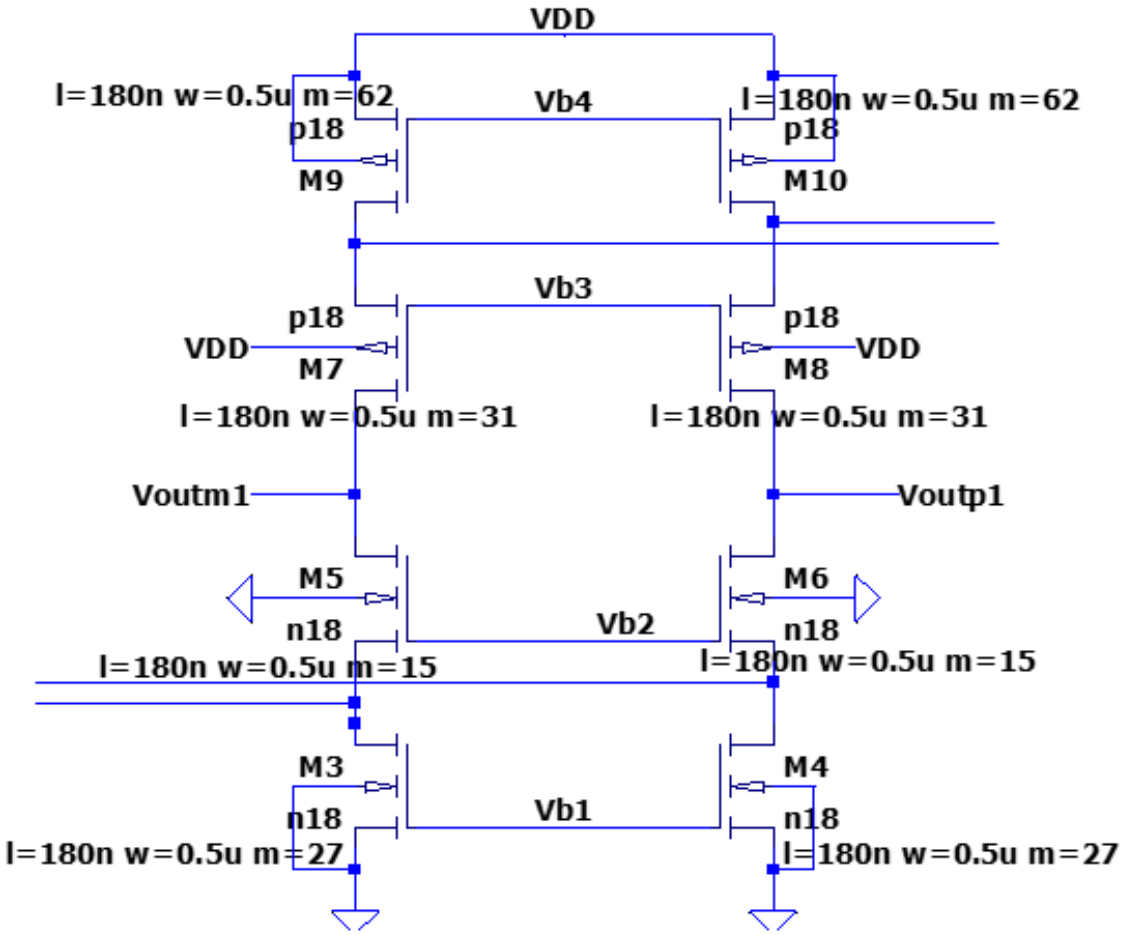

Main Transistor Stack

	M3	M5	M7	M9
I_D	149μA	86.1μA	86.1μA	160μA
V_{GS}	601mV	637mV	759mV	700mV
g_m	1.75mS	1.05mS	0.841mS	1.49mS
r_o	10.2kΩ	27.78kΩ	56.82kΩ	13.26kΩ

Circuit Design

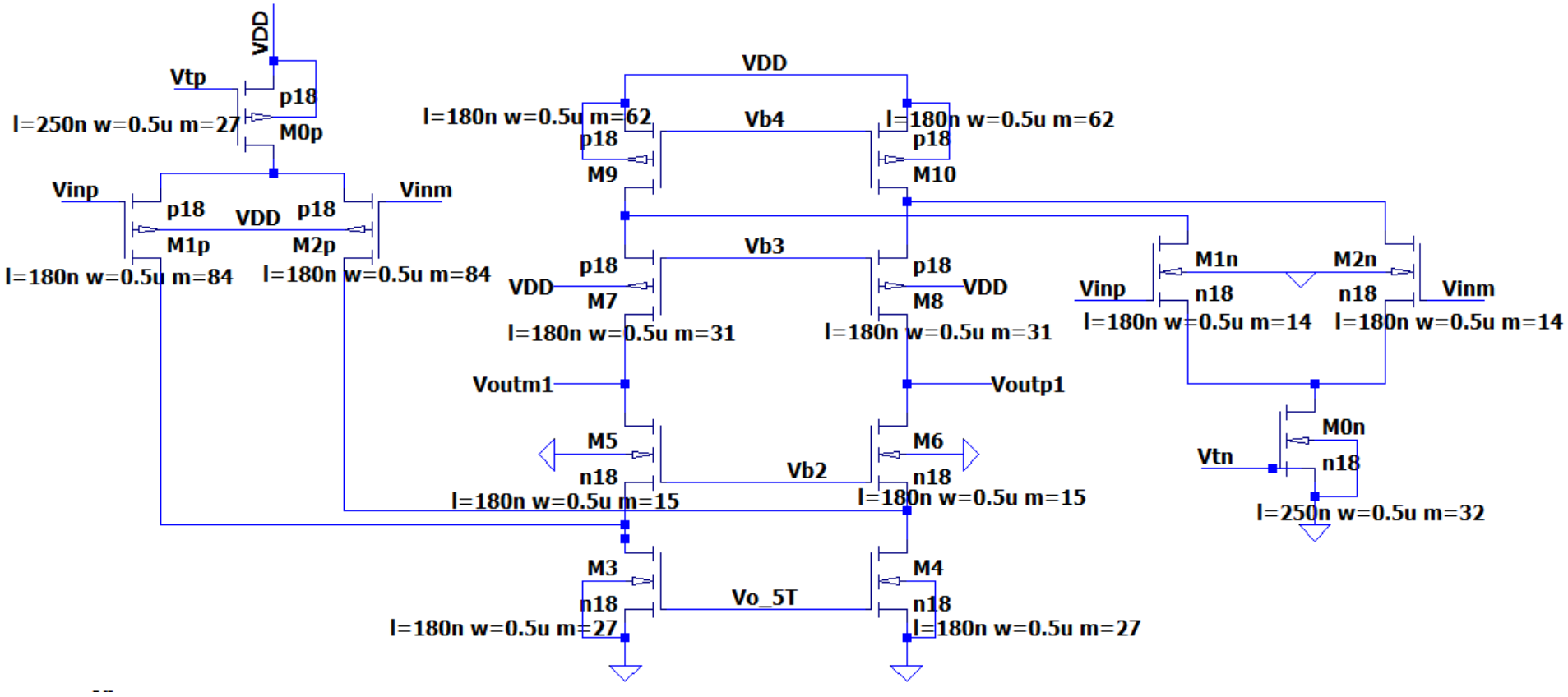

NMOS-PMOS Folded Cascode design

DC Analysis

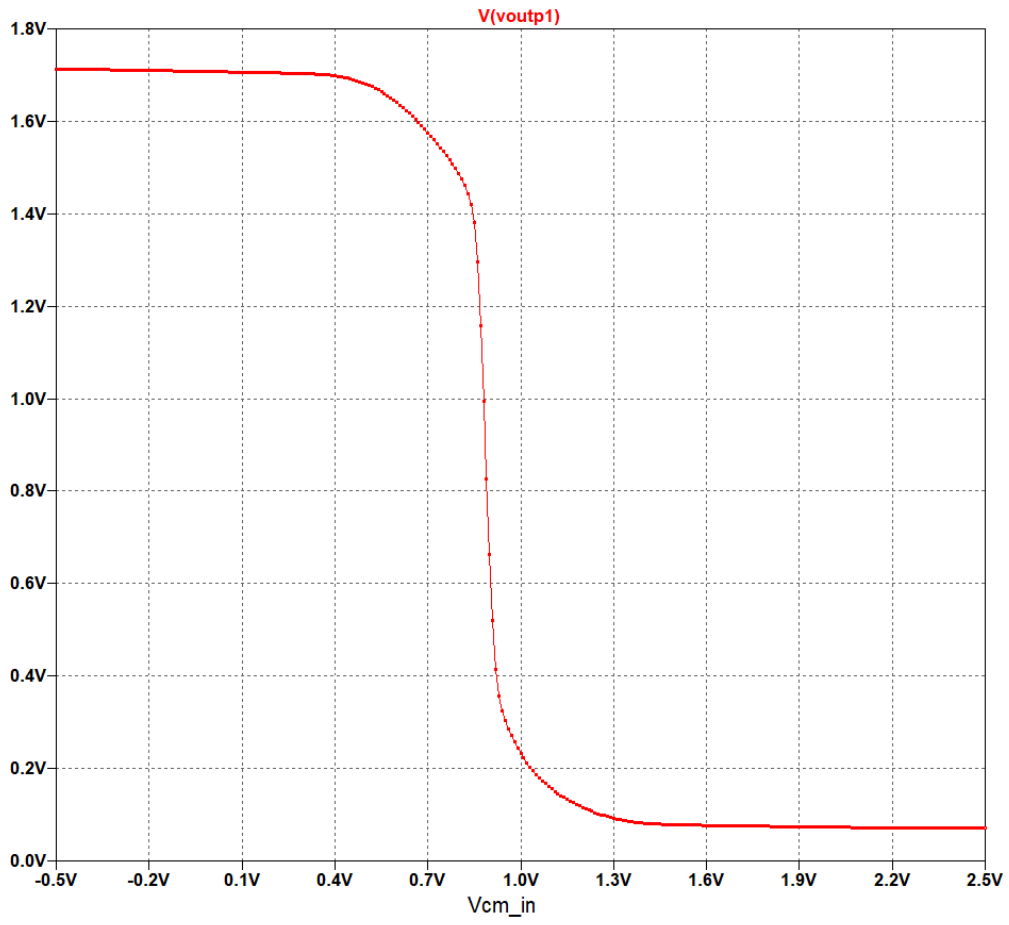

- Input CM Voltage
  - Sweep from -0.5V to 2.5V
- Output DC Voltage
  - Range: 0.7V to 1V

- Rail to Rail working capability
  - Input CM voltage
  - 0.7V to 1V

AC Analysis(V_{cm}=0.9V)

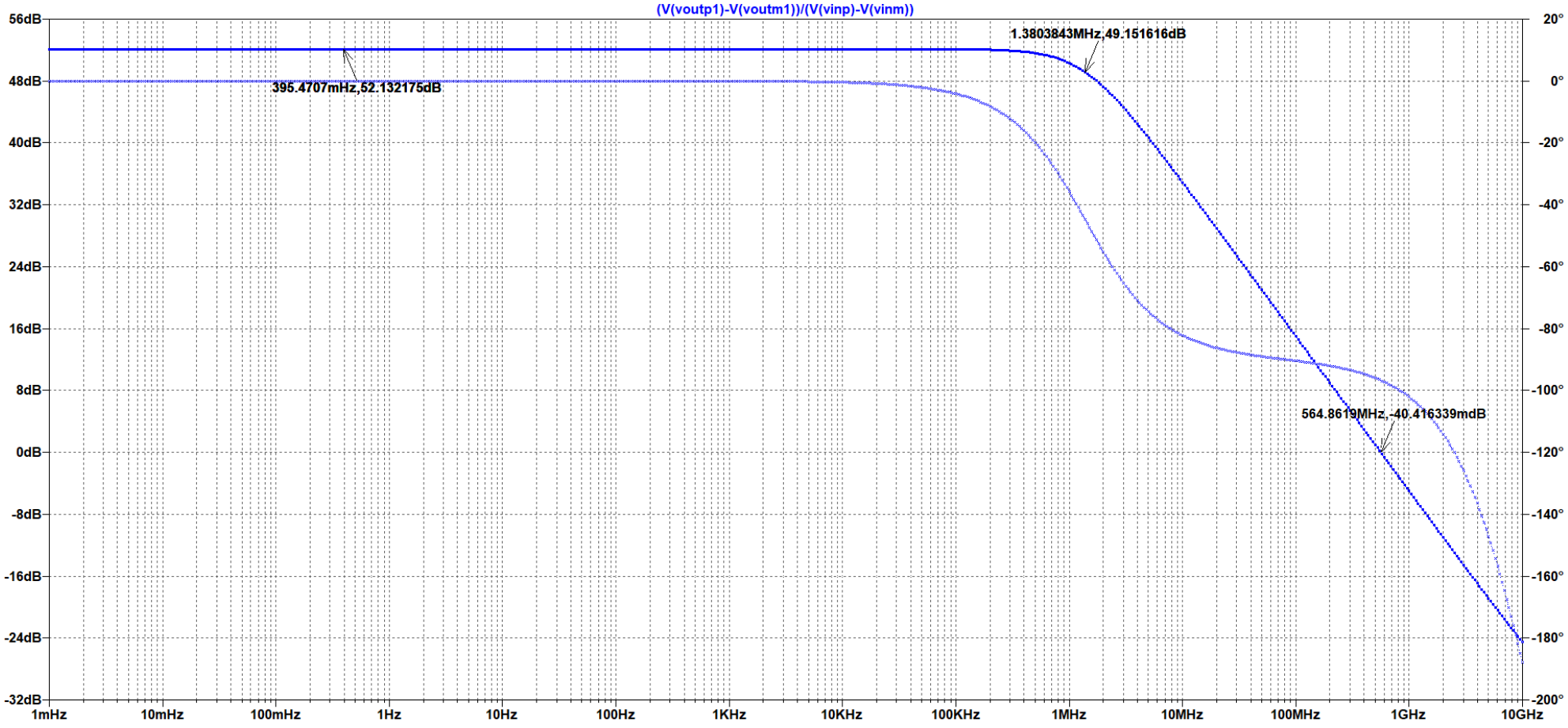

AC Analysis

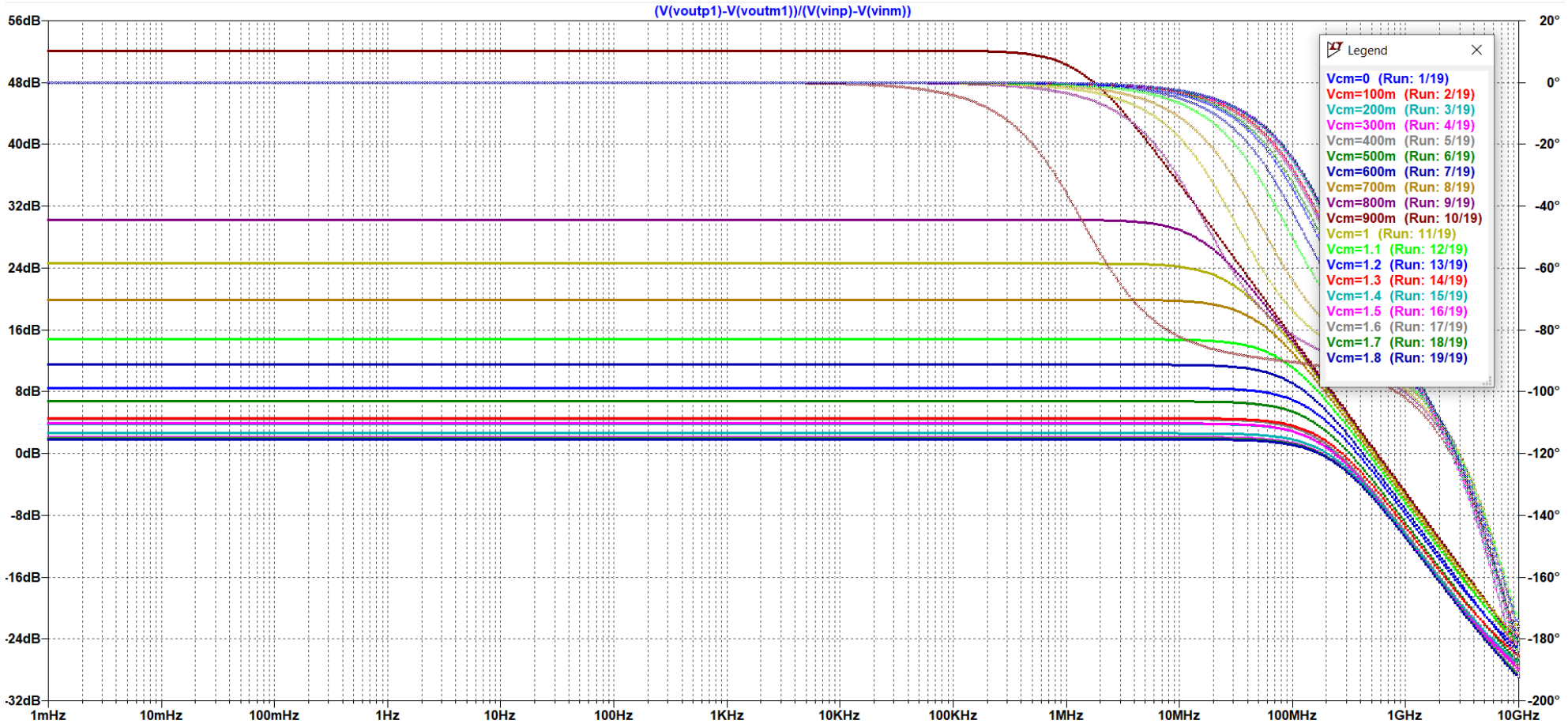
(V(voutp1)-V(voutm1))/(V(vinp)-V(vinm))
56dB
48dB
40dB
32dB
24dB
16dB
8dB
0dB
-8dB
-16dB
-24dB
-32dB
20°
0°
-20°
-40°
-60°
-80°
-100°
-120°
-140°
-160°
-180°
-200°
1mHz
10mHz
100mHz
1Hz
10Hz
100Hz
1KHz
10KHz
100KHz
1MHz
10MHz
100MHz
1GHz
10GHz
Legend
Vcm=0 (Run: 1/19)
Vcm=100m (Run: 2/19)
Vcm=200m (Run: 3/19)
Vcm=300m (Run: 4/19)
Vcm=400m (Run: 5/19)
Vcm=500m (Run: 6/19)
Vcm=600m (Run: 7/19)
Vcm=700m (Run: 8/19)
Vcm=800m (Run: 9/19)
Vcm=900m (Run: 10/19)
Vcm=1 (Run: 11/19)
Vcm=1.1 (Run: 12/19)
Vcm=1.2 (Run: 13/19)
Vcm=1.3 (Run: 14/19)
Vcm=1.4 (Run: 15/19)
Vcm=1.5 (Run: 16/19)
Vcm=1.6 (Run: 17/19)
Vcm=1.7 (Run: 18/19)
Vcm=1.8 (Run: 19/19)

CMFB

Principle of CMFB

- Common Mode Feedback to correct for V_{cm} because of variation in PMOS and NMOS current pairs
- Compare the Common mode voltage to reference voltage
- Output signal of CMFB Stage can be fed back
- Providing it on gate terminal helps in controlling V_{gs} and hence, current through it.

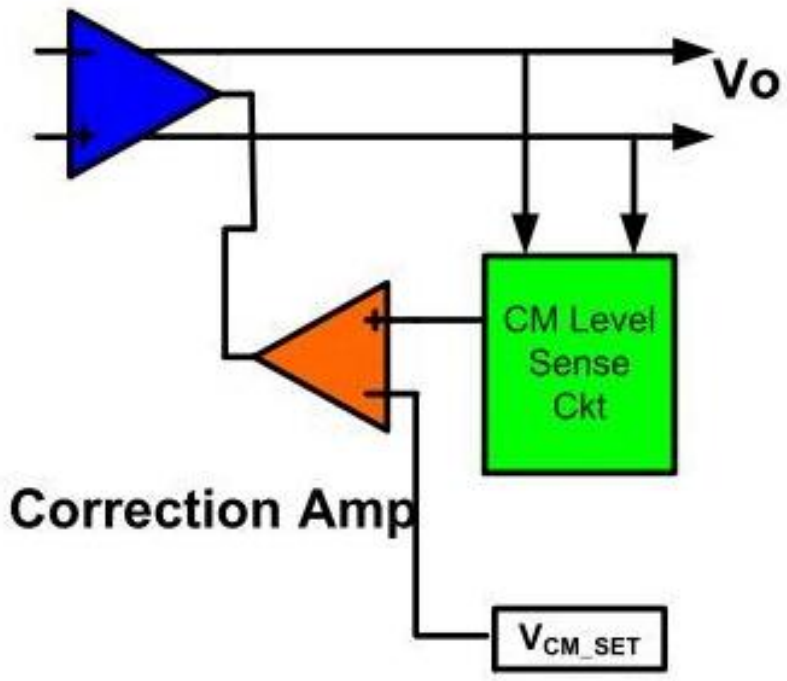

Detection of Common mode voltage

- Sensed by simple resistor
- But direct resistor comes parallel to R_{out}
- Results in low gain
- Require high value of Resistor

- Solution is to use buffer stage
- Followed by low value resistor to detect the output V_{CM}

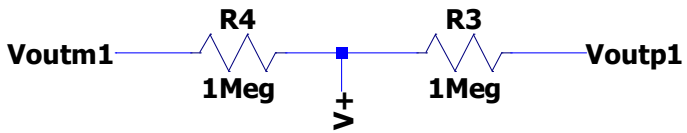

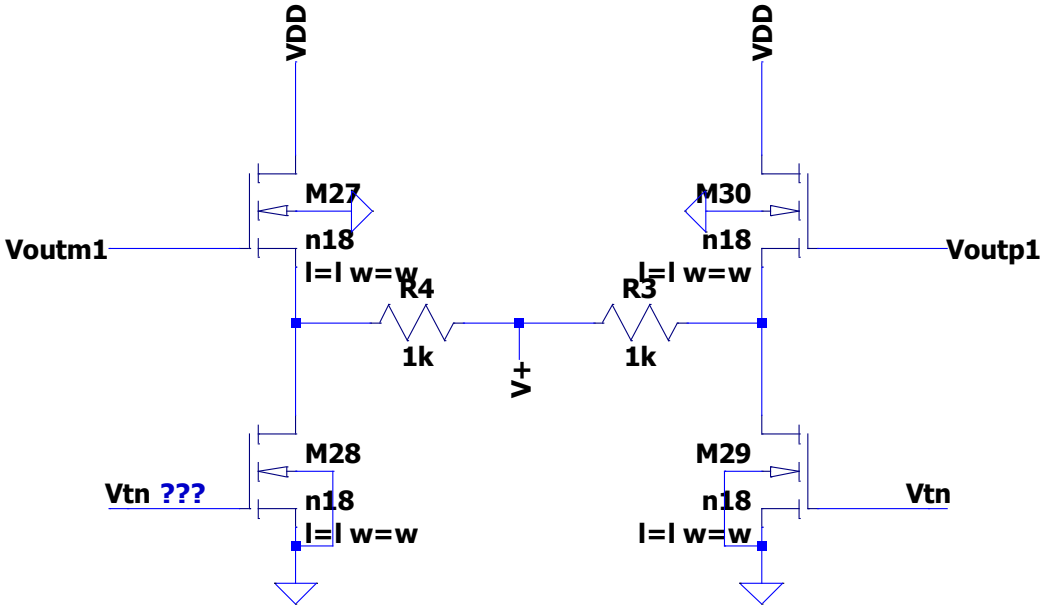

Source Follower

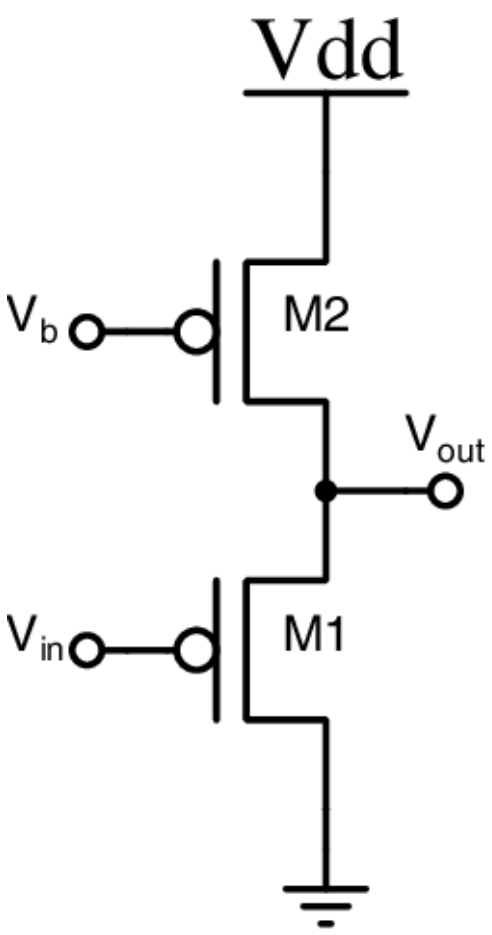

Benefits:

- Very high input impedance

Price:

- Voltage(V_{GS}) drop across the M2 transistor
- Reference voltage = V_{CMref}- V_{GS}

- V_{CMref} = 0.9V
- V_{GS} = 0.593V ≈ 0.6V

Correction for Common Mode voltage

- Common Mode voltage detected
- CMFB stage: 5T OTA
- Output: Vo_5T
- Reference voltage : (V-)
  - $(V-) = V_{CMref} - V_{GS} = 0.3$

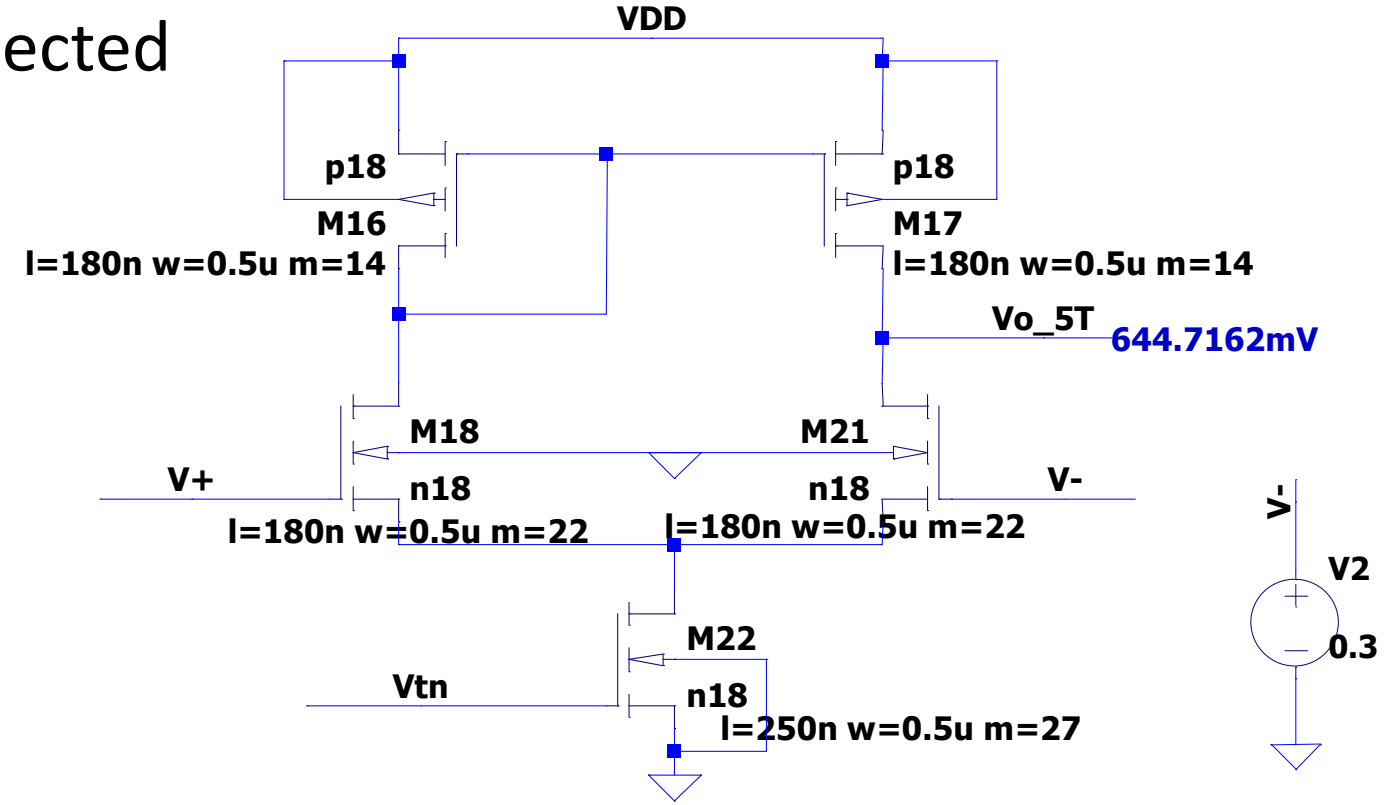

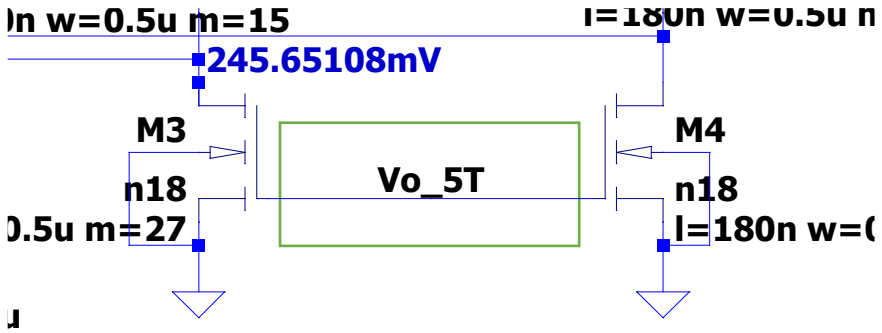

DC Analysis

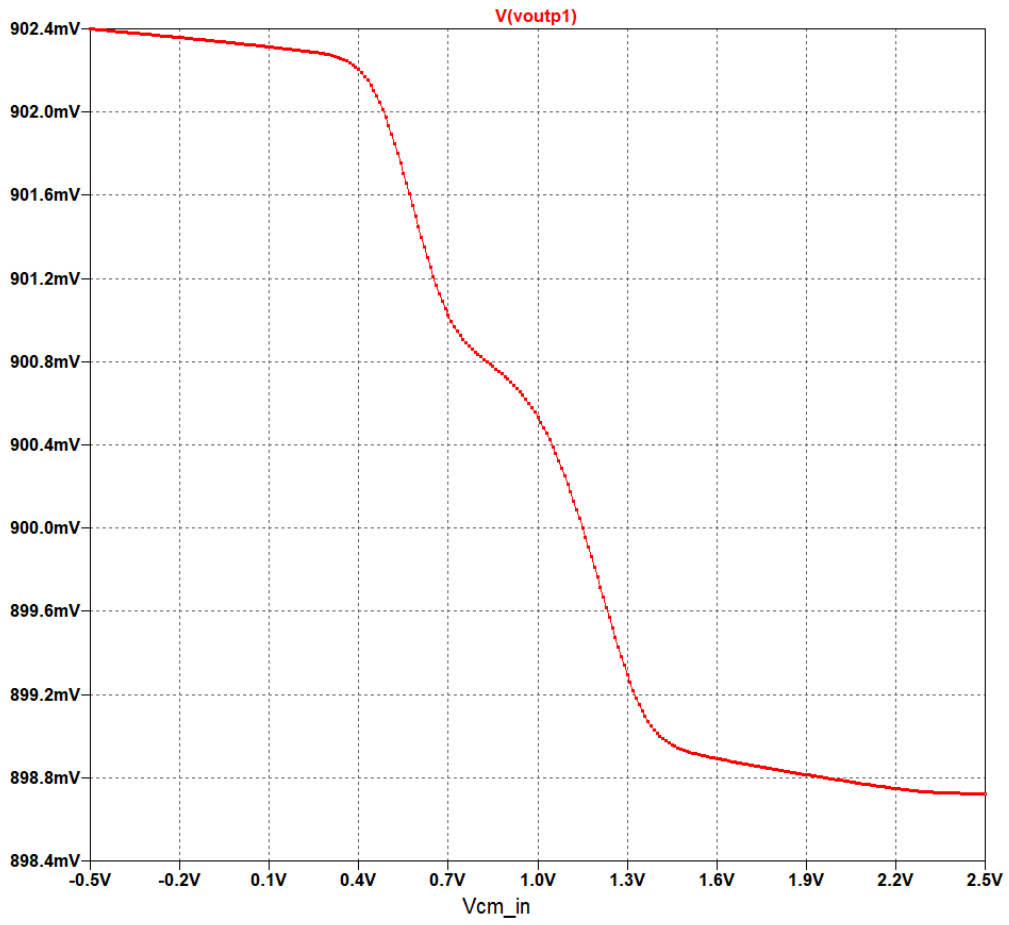

- Input CM Voltage
  - Sweep from -0.5V to 2.5V
- Output DC Voltage
  - Not much Variation.
- Rail to Rail working capability
  - Input CM voltage
  - Full Range

DC Analysis

- Input CM Voltage
  - Sweep from -0.5V to 2.5V
- Output CM Voltage
  - Range: 0.4V to 1.4V

- Output of CMFB Stage
  - Range: 0.4V to 1.4V
  - Similar behavior

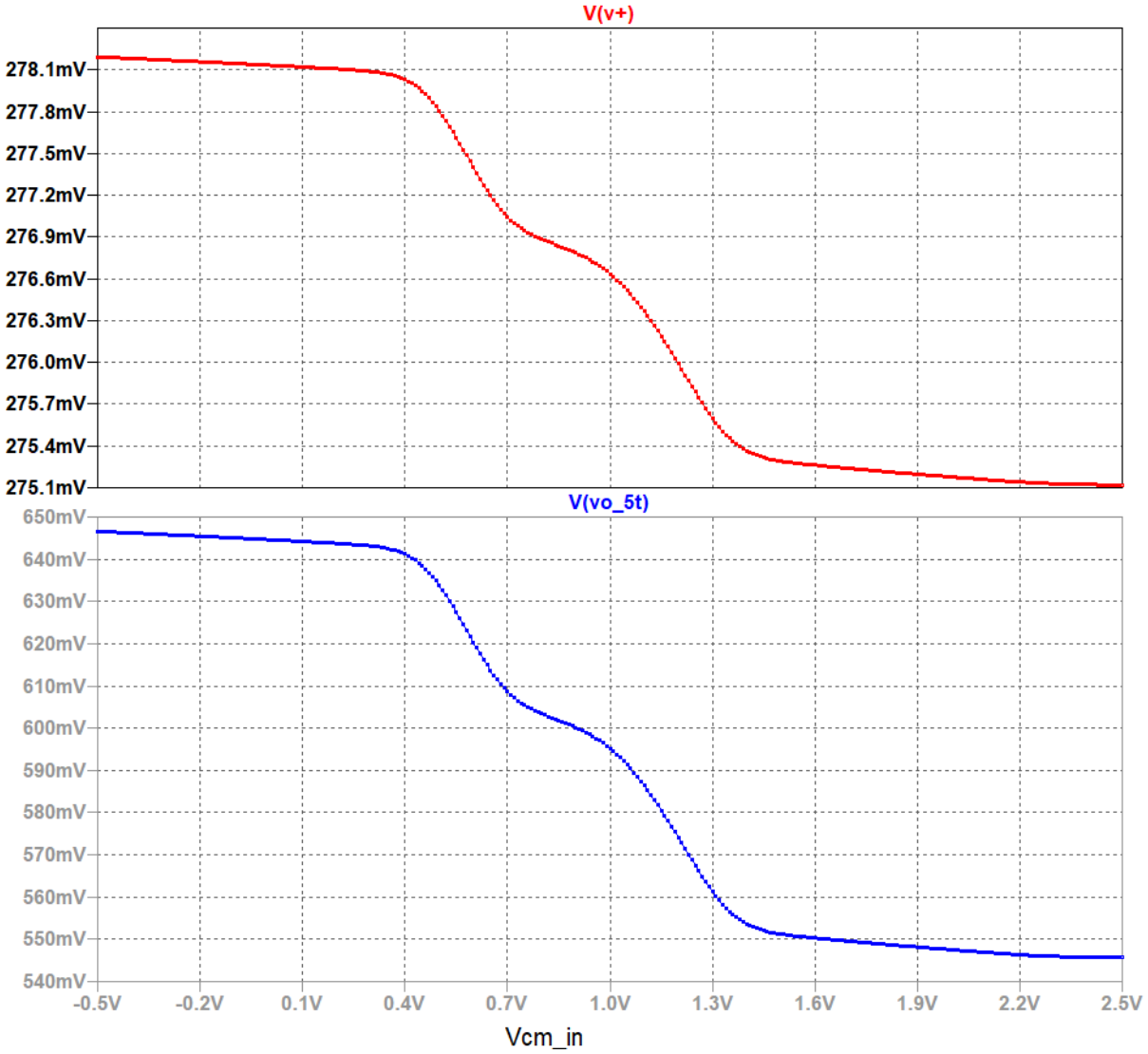

AC Analysis

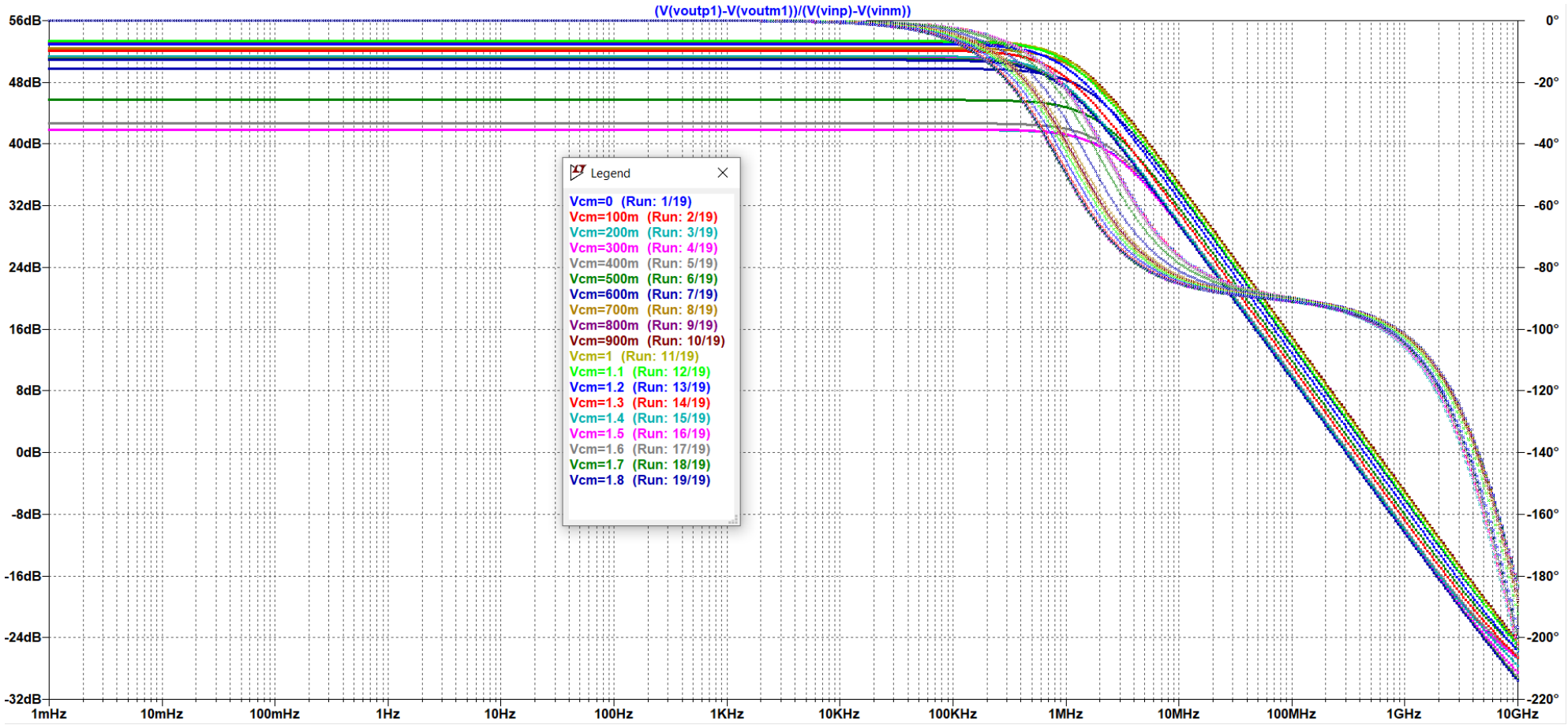

Folded cascode with CMFB

Transient Analysis

- To simulate current disturbance: extra current source used.
- Current sources in parallel with the MOSFET
- Current source: Pulse input

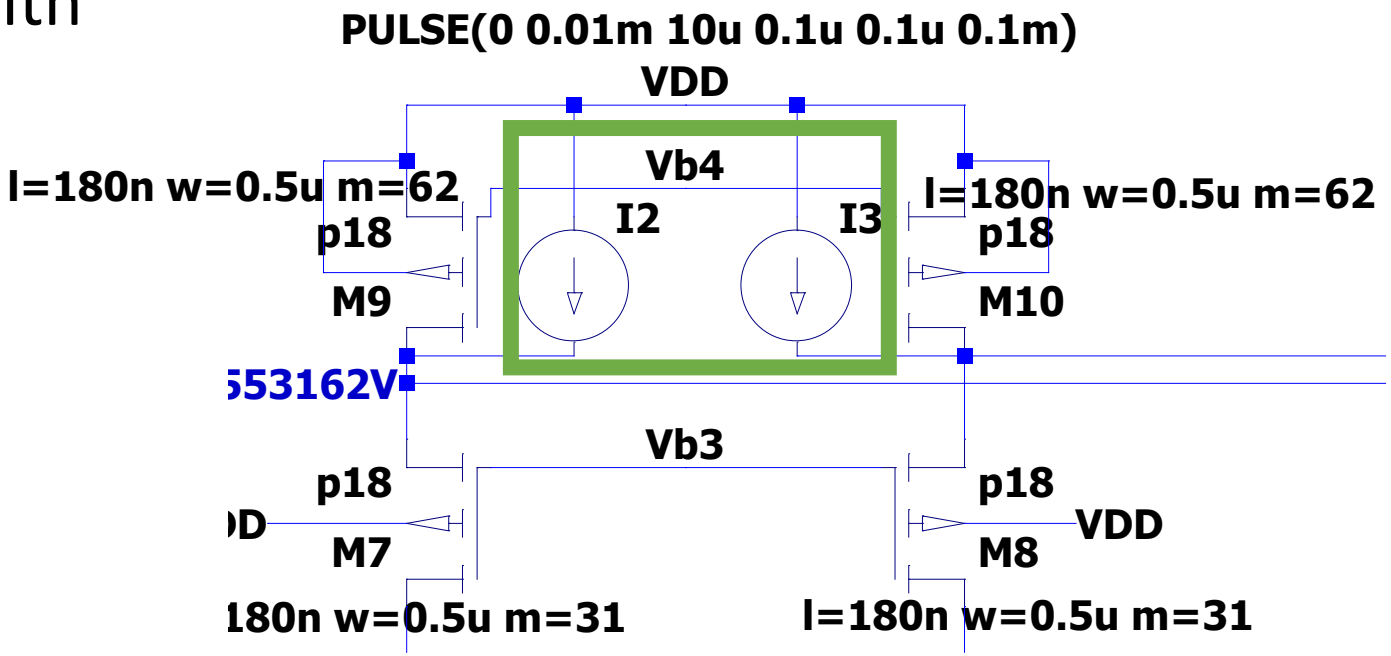

Results

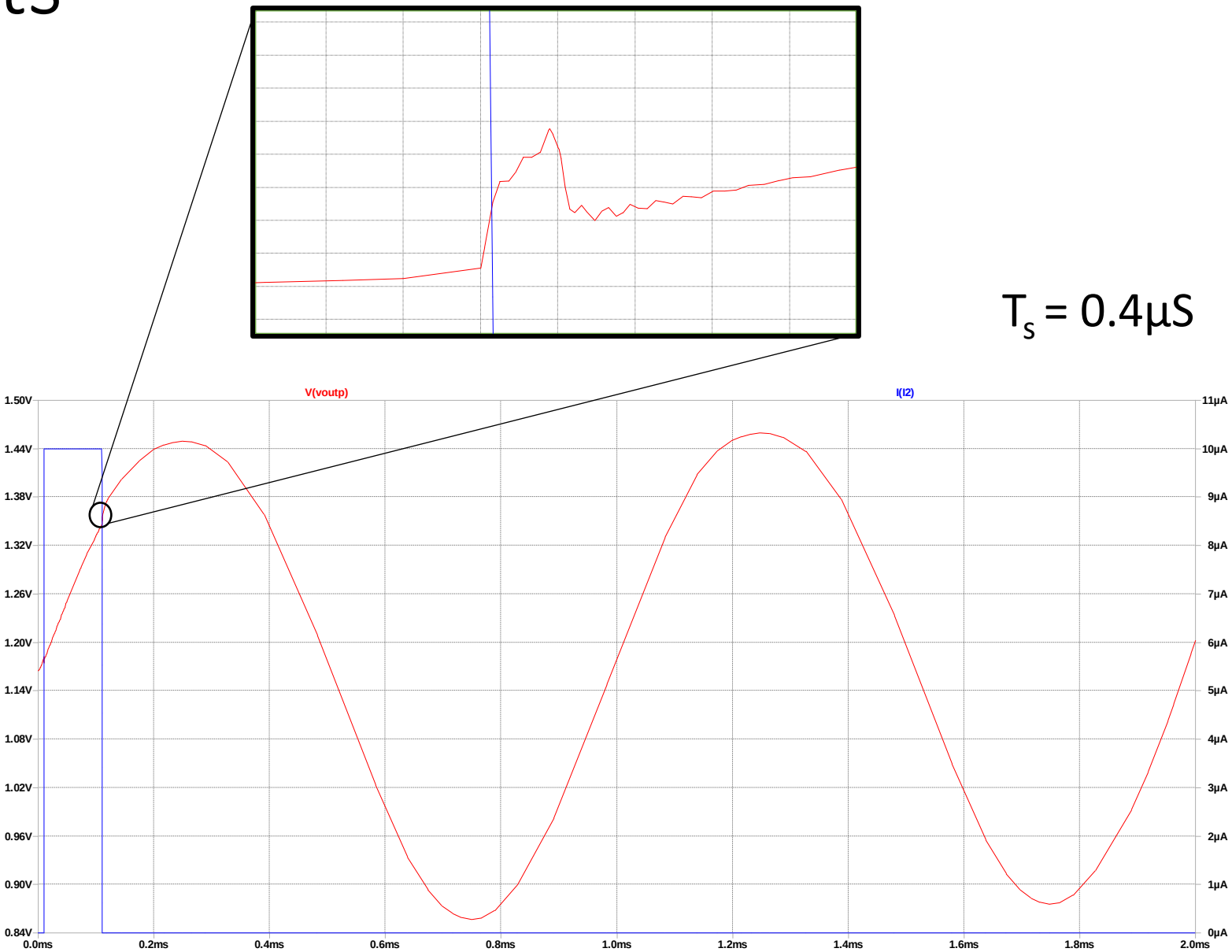

$T_s = 0.4\mu S$

Transient Voltage analysis

$T_s = 0.4\mu S$

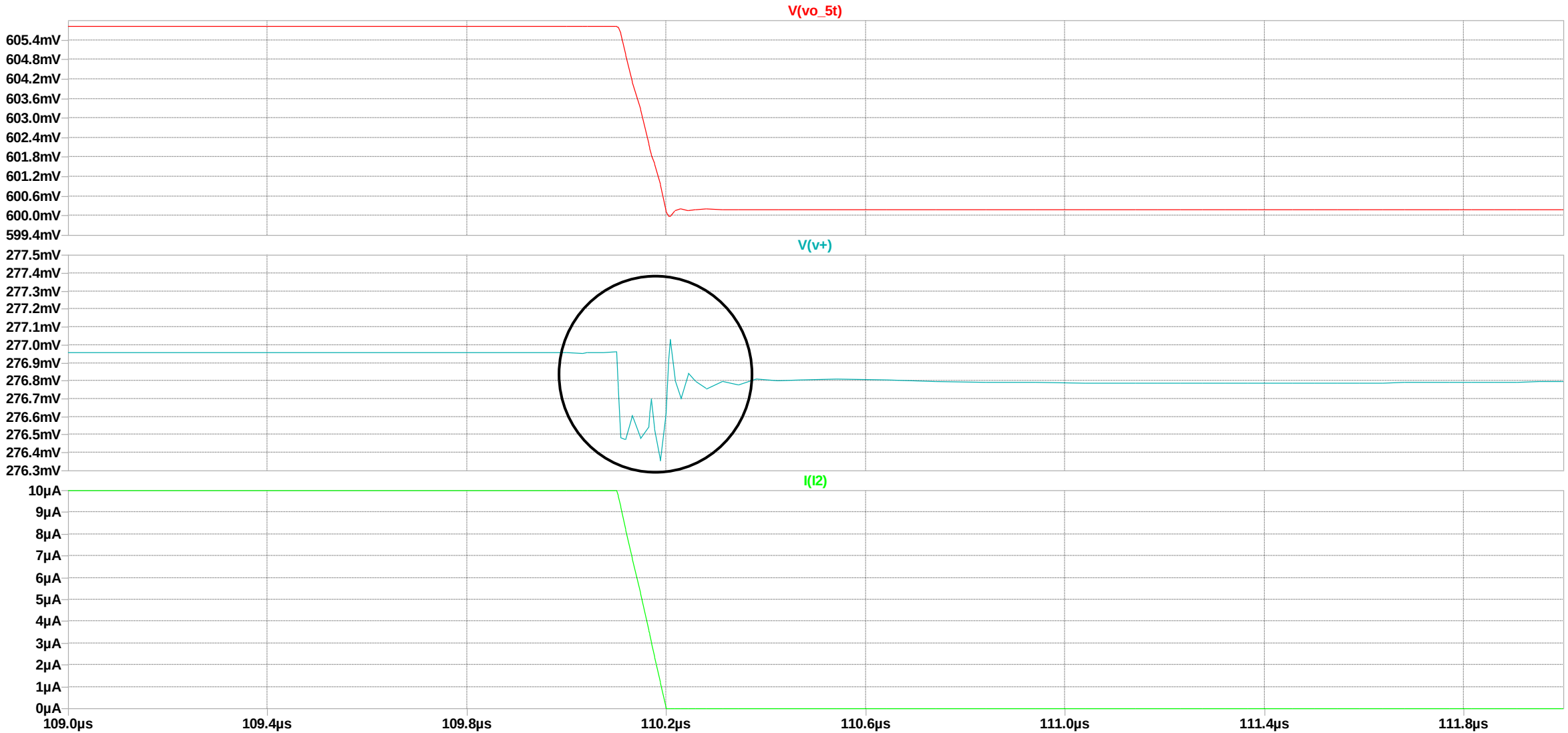

2nd Stage

Design Budgeting

- Common source amplifier
- Design parameters:
  - V_{gs}(for second stage)
    - $V_{gs} = V_{DD} - V_{CMRef} = 1.8V - 0.9V = 0.9V$
  - $A_{v,req}$(Required gain) $\sim 25dB$ = 17.78
- Calculation:
  - $A_{v,req} = 17.78 = g_m * R_{out}$
  - $(2.22m) * (8k\Omega) = 17.78$
  - $R_{out} \sim 8k\Omega$
  - $g_m \approx 2.22mS$

PMOS Characterization

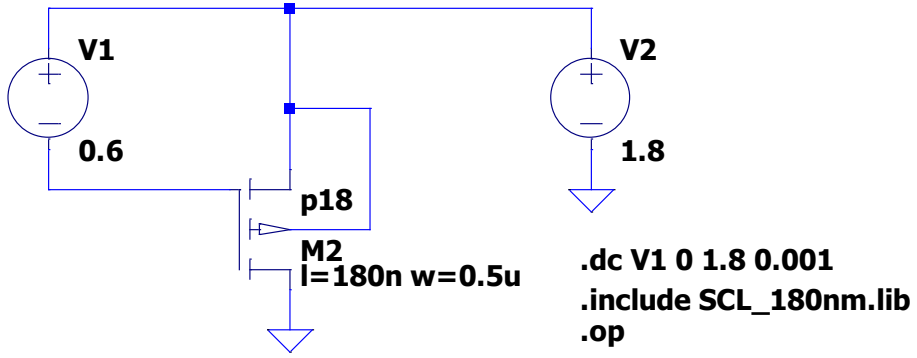

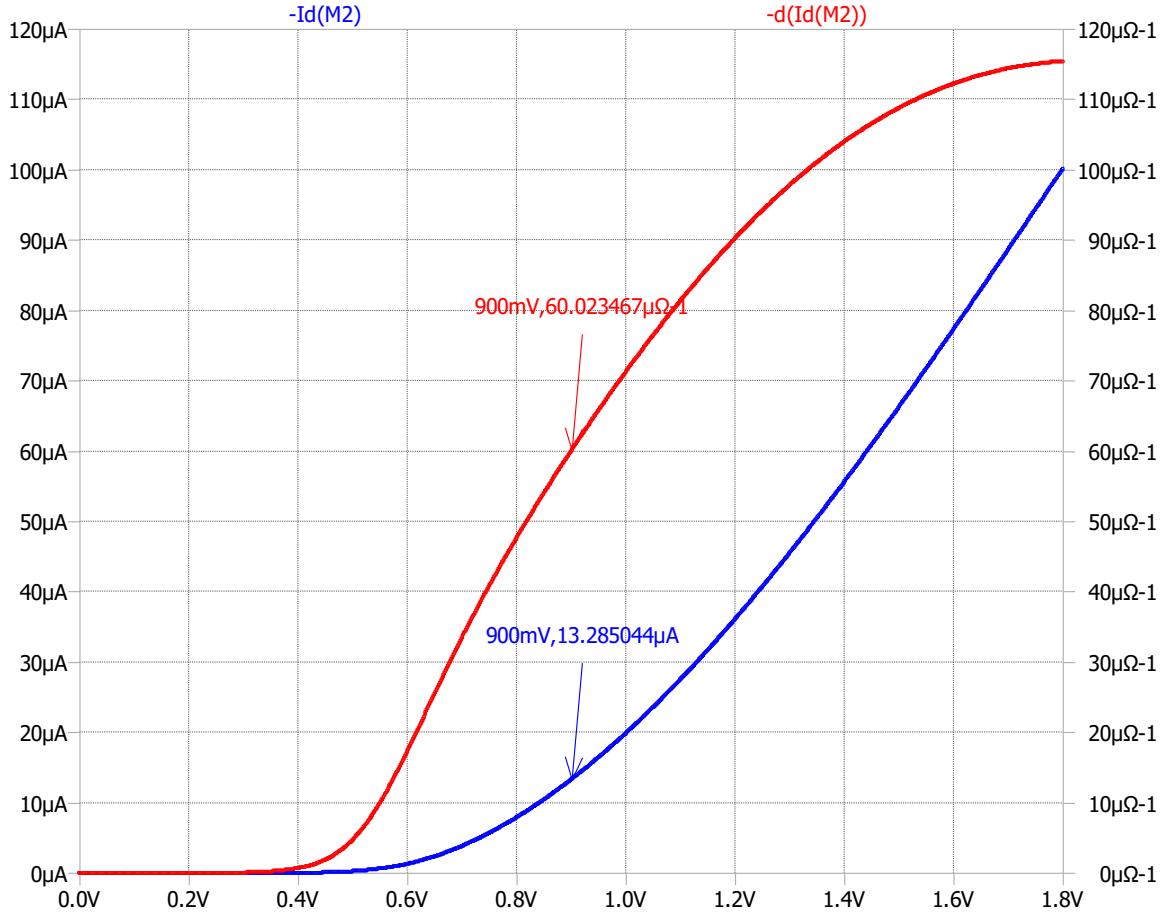

- Scaling factor(multipliers) = $\frac{2.22mS}{60.023467\mu S}$ = 36.98 ≈ 37

2nd Stage Design

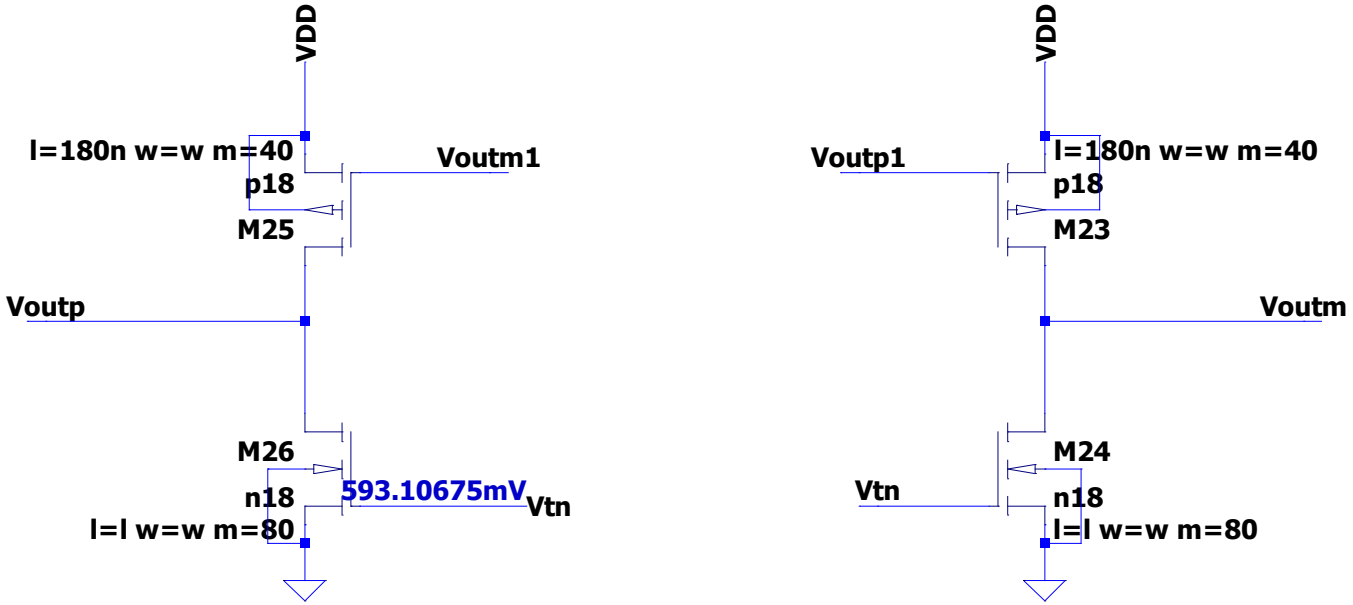

2nd Stage Circuit

Name:	m6	m25	m23	m17	m16
Model:	n18	p18	p18	p18	p18
Id:	1.54e-04	-4.30e-04	-4.30e-04	-2.85e-07	-2.08e-07
Vgs:	6.76e-01	-8.98e-01	-8.98e-01	-3.94e-01	-3.94e-01
Vds:	7.02e-01	-6.57e-01	-6.57e-01	-1.16e+00	-3.94e-01
Vbs:	-2.01e-01	0.00e+00	0.00e+00	0.00e+00	0.00e+00
Vth:	5.19e-01	-5.14e-01	-5.14e-01	-5.11e-01	-5.16e-01
Vdsat:	1.54e-01	-3.00e-01	-3.00e-01	-3.91e-02	-3.89e-02
Gm:	1.50e-03	2.04e-03	2.04e-03	6.47e-06	4.75e-06
Gds:	4.15e-05	9.37e-05	9.37e-05	1.09e-07	9.38e-08

Operating Point

Simulation Results

- g_m = 2.04mS
- R_{out} = 10.672kΩ
- Gain(A_v) = 23.32dB
- Cut-off Frequency(f_c)

$$\frac{1}{2\pi RoutCout} = 29.83\text{MHz}$$

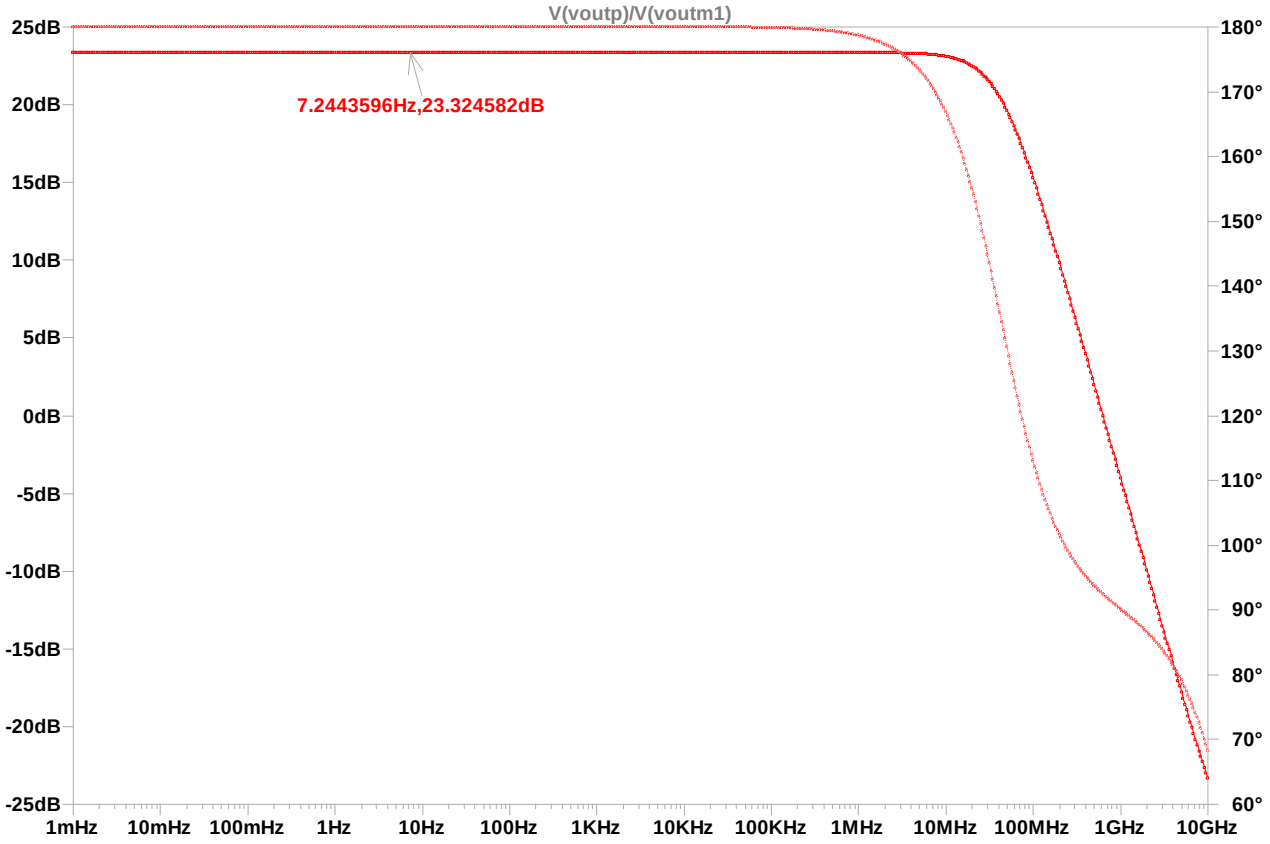

Gain Plot

Phase Compensation(Miller compensation)

- Resistor Calculation:

  $R_z > \frac{1}{g_m}$

  $\frac{1}{g_m} = 490.196\Omega$

  Taking $R_z = 500\Omega$

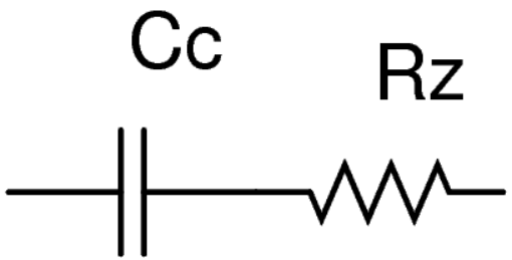

- Taking arbitrary value for capacitor c_c = 500fF

Circuit Design

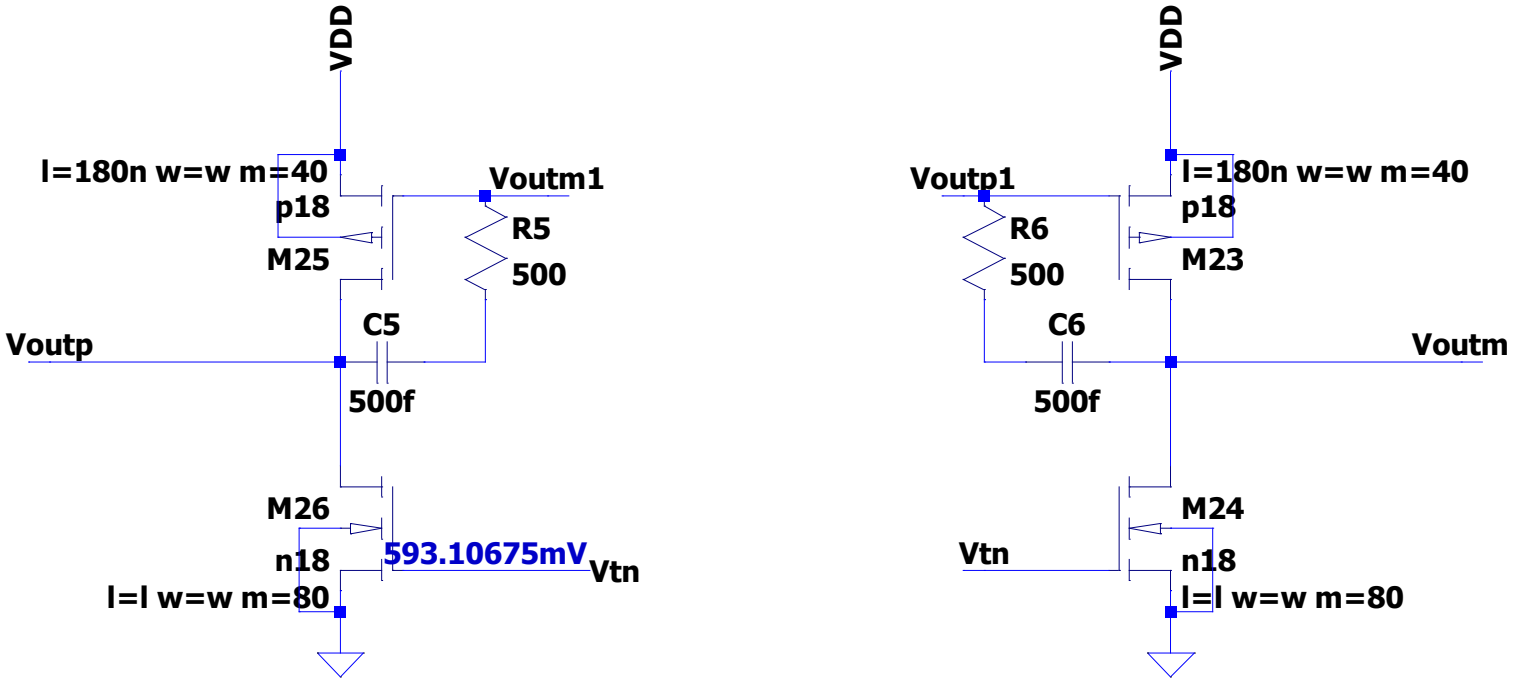

2nd Stage with miller compensation(between 1st and 2nd stage)

Simulation result

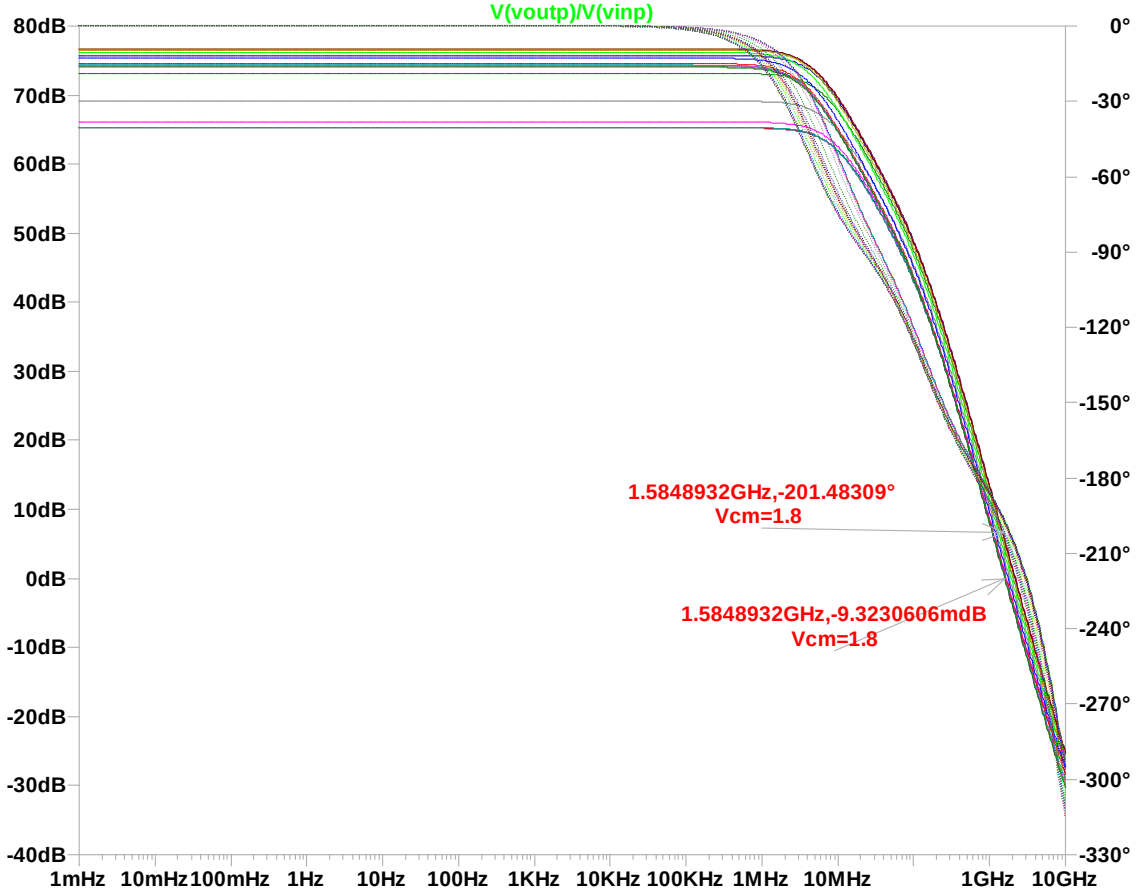

Without Miller Compensation

Gain Cross-over frequency = 1.584GHz

Phase margin = -201.48+180 = -21.48(Unstable)

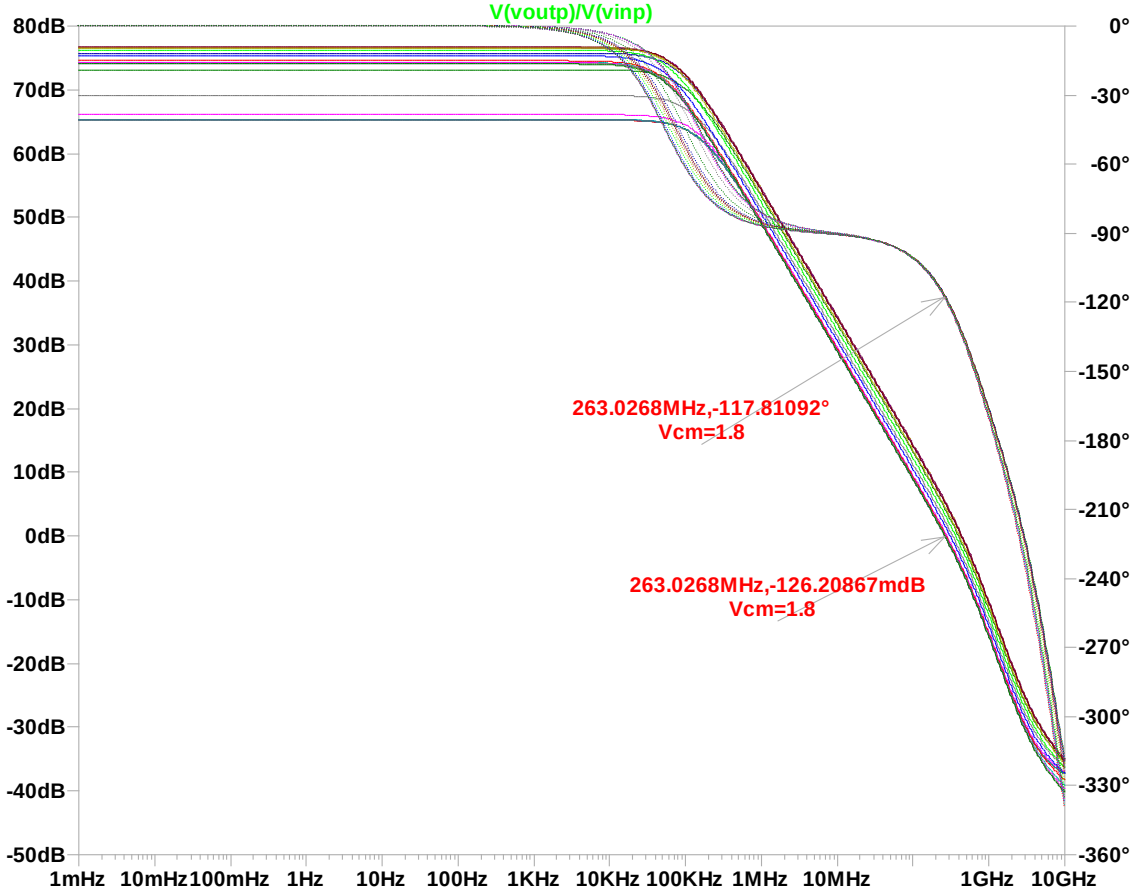

With Miller Compensation

Gain Cross-over frequency = 263.02 MHz

Phase margin = -117.81+180 = 62.19(stable)

Results

DC Analysis

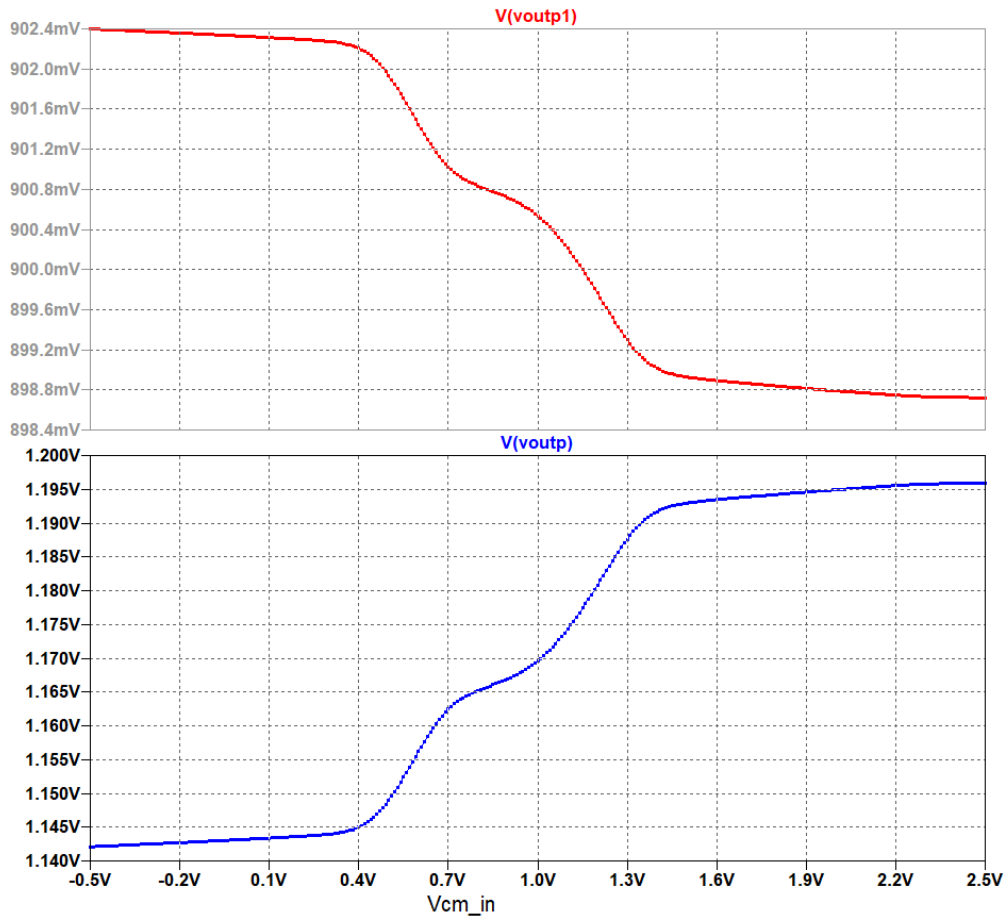

- Input CM Voltage
  - Sweep from -0.5V to 2.5V
- Output DC Voltage of Stage-1
  - Range: 0.4V to 1.4V
  - Not much variation
- Output DC Voltage of Stage-2 (Final O/P)
  - Range: 0.4V to 1.4V
  - Not much variation
- Rail to Rail working capability
  - Input CM voltage – Full Range

AC Analysis (V_{CM} = 0.9V)

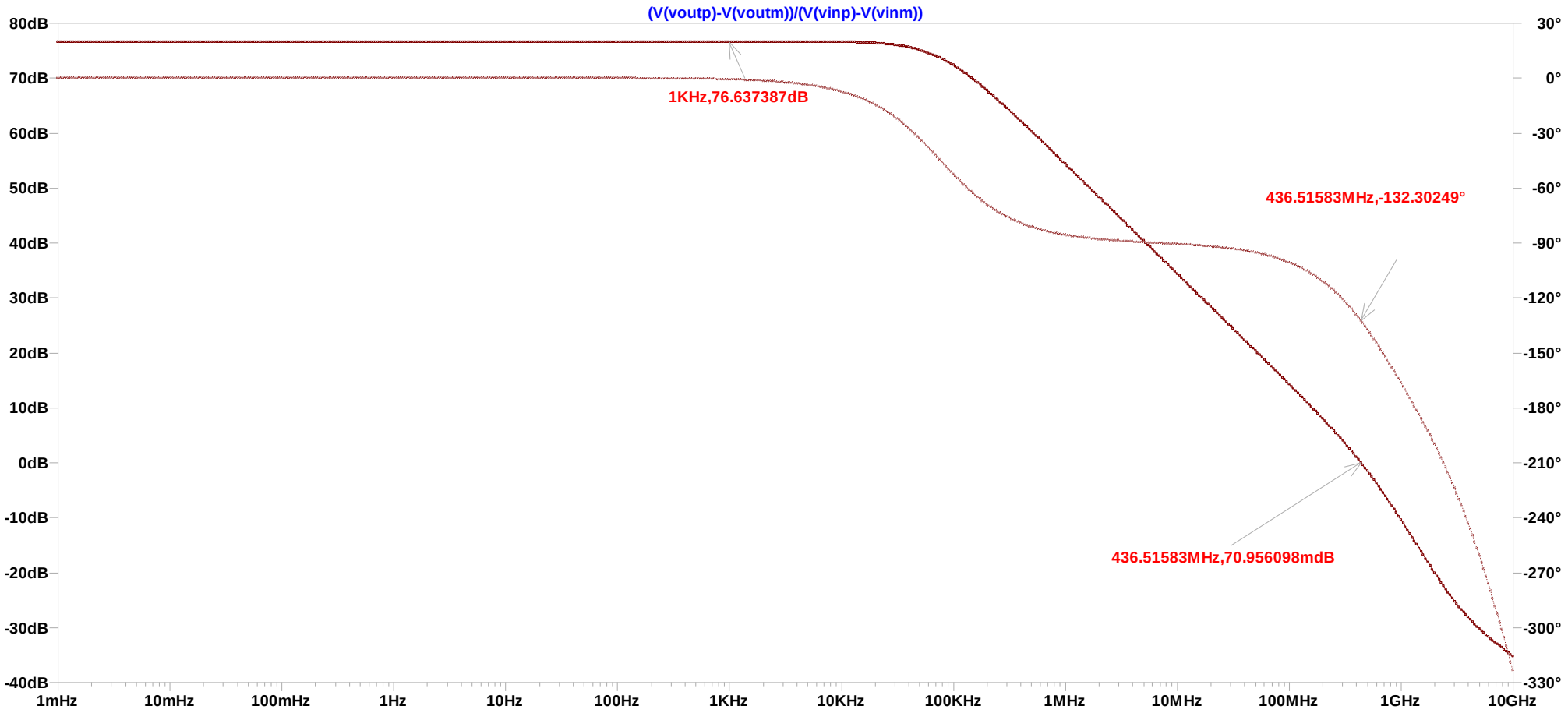

AC Analysis (V_{CM} sweep)

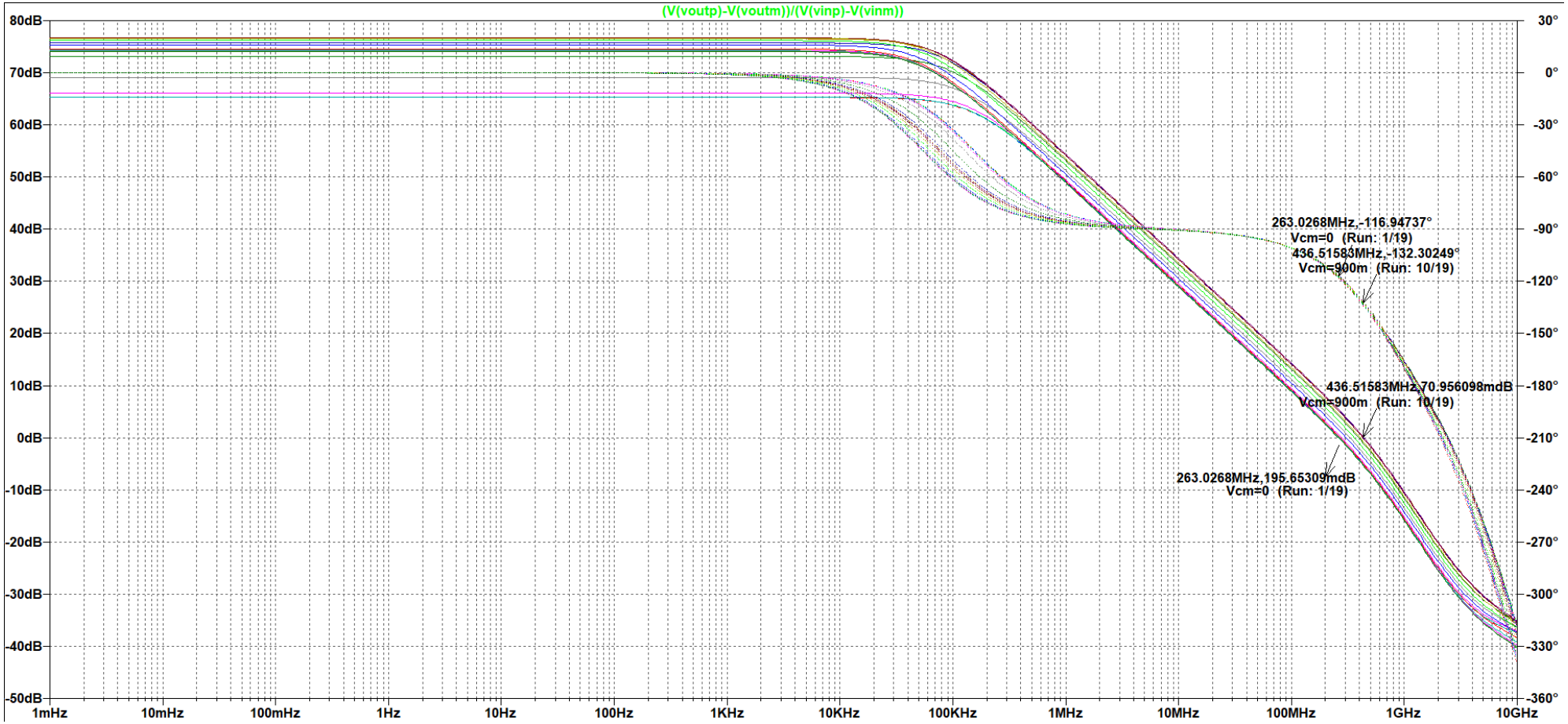

AC Analysis (V_{CM} sweep)

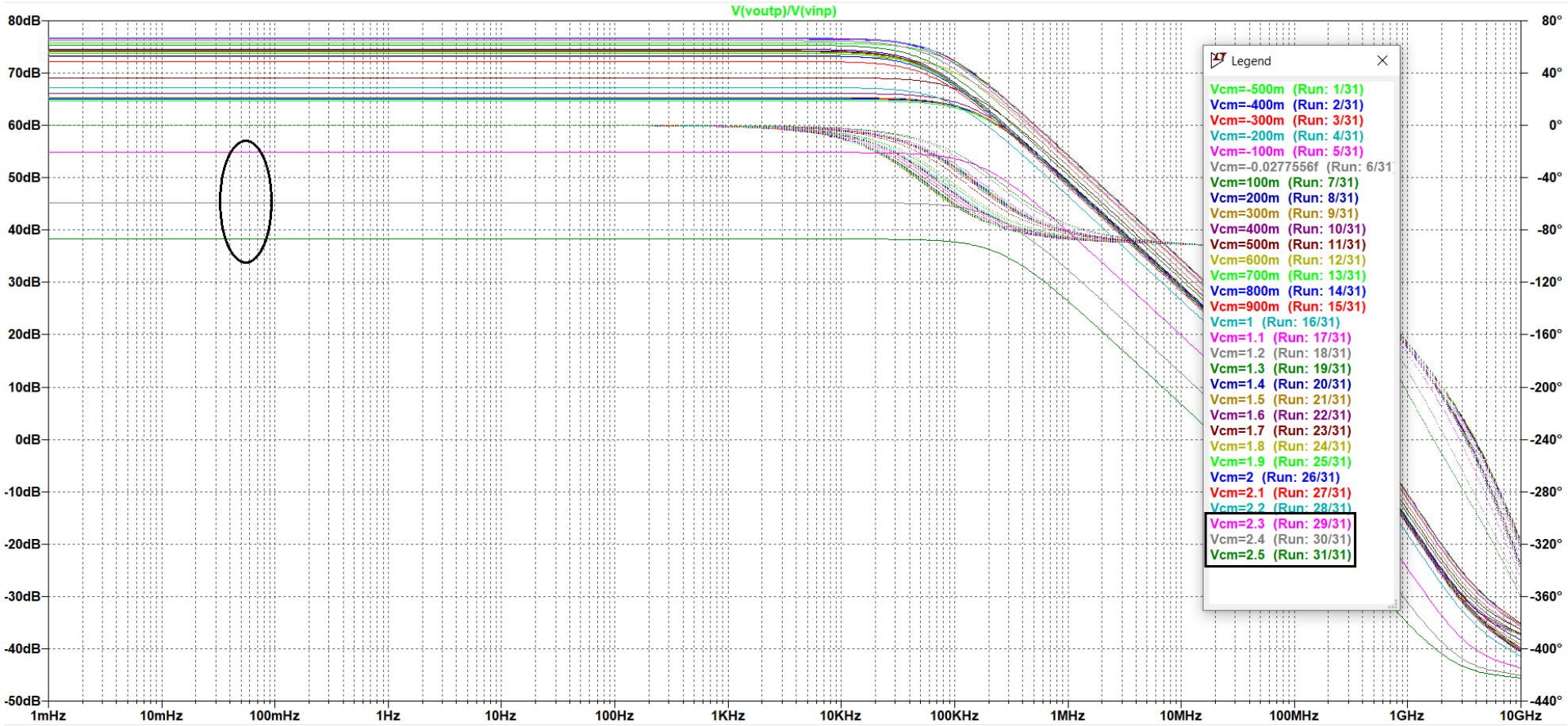

Results & Conclusion

- Gain
  - 65.3 dB to 76.63 dB
- BW
  - 156.055 kHz to 77.16 kHz
- UGF
  - 263 MHz to 436.5 MHz
  - UGF > 100 MHz
- Phase margin
  - 48° to 63°
- Power Consumption (Overall)
  - 1.8*1.37m = 2.467mW
- Power Consumption (w/o bias)
  - 1.8*1.33m = 2.39mW
- Input common mode range
  - Rail-to-Rail
- CMFB
  - Working

Improvements

- Rail-to-Rail input capabilities in stage-1 (folded cascode)
- Gm Calibration
- Overall Gain Improvements

References

- Design of Analog CMOS Integrated Circuits, B. Razavi
- ECEN474/704: (Analog) VLSI Circuit Design (Spring 2018), Sam Palermo Analog & Mixed-Signal Center, Texas A&M University
  - Lecture 15: Fully Differential Amplifiers & CMFB
  - Lecture 17: Fully Differential Amplifiers & CMFB

THANK YOU!